PUBLISHED: 21-NOV-2016
2017.0 DISCOVERY (LR), 307-05

AUTOMATIC TRANSMISSION /TRANSAXLE EXTERNAL CONTROLS - VEHICLES WITH: 8HP45 8-SPEED AUTOMATIC TRANSMISSION AWD

DESCRIPTION AND OPERATION

transmissionmanuals.com

COMPONENT LOCATION

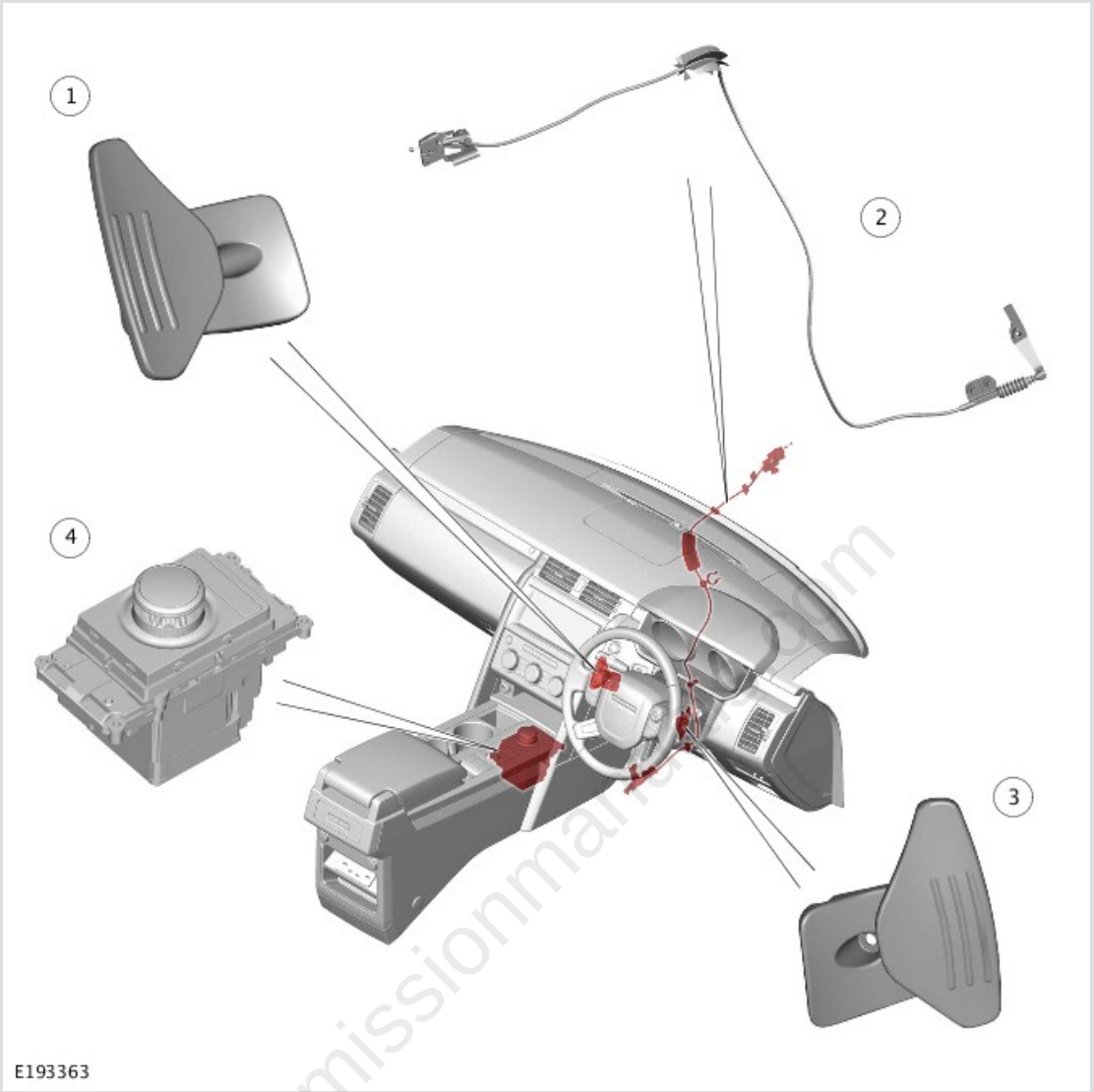

ITEM	DESCRIPTION
1	Downshift paddle switch
2	Emergency Park Release (EPR) assembly
3	Upshift paddle switch
4	Transmission Control Switch (TCS)

OVERVIEW

The external controls for the transmission consist of a Transmission Control Switch (TCS), two paddle switches and an Emergency Park Release (EPR) system.

The TCS transmits driver transmission selections to the Transmission Control Module (TCM) on the High Speed (HS) Controller Area Network (CAN) powertrain systems bus.

The steering wheel mounted paddle switches can be used to initiate gear changes, with the TCS in either the Drive (D) or Sport (S) position, causing a change of operating mode from automatic gear selection to manual gear selection.

The Emergency Park Release (EPR) is used to put the transmission in Neutral (N) during vehicle recovery operations, when it is not possible to put the transmission in (N) using the TCS.

DESCRIPTION

TRANSMISSION CONTROL SWITCH

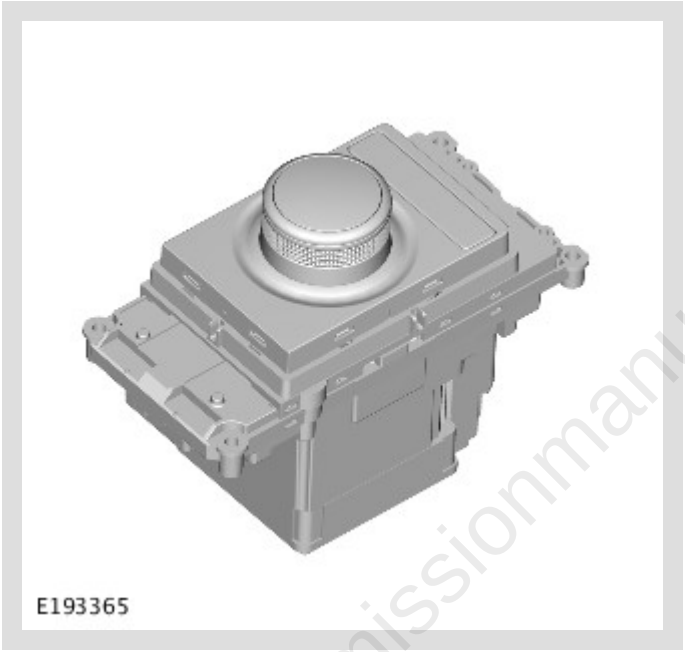

transmissionmanuals.com

The Transmission Control Switch (TCS) is installed in the floor console and controls the driver transmission selections.

Rotation of the TCS knob allows the selection of Park (P) , Reverse (R), Neutral (N), Drive (D) and Sport (S). By depressing the TCS knob and rotating clockwise from the (D) position, (S) mode can be selected. The TCS is a fully electronic transmission selector with no mechanical connection to the transmission.

The TCS knob rises from the TCS once the engine is running. When the engine is stopped with the TCS knob in any raised position other than (N), it retracts into the TCS again, rotating to the (P) position. If the TCS knob is in position N when the engine is stopped, it remains in the raised position for up to 10 minutes, for use in a drive through car wash for example. After 10 minutes the TCS knob automatically retracts into the TCS and returns to the (P) position. The TCS knob also retracts if (P) is selected within the 10 minute period, or the vehicle is locked.

Under very unlikely circumstances, if the TCS knob does not rise from the floor console when the engine is started, but electrical power is supplied to the TCS, the retracted

TCS knob can still be rotated to make selections. If electrical power to the TCS is lost, the TCS knob will not rise from the floor console when the engine is started and the retracted TCS knob will not rotate. If the TCS knob does not return to (P) or (N), the vehicle will not start.

The TCS contains an internal interlock solenoid to prevent the TCS knob from being rotated when the engine is not running.

The engine can be stopped with the TCS knob in any position. Once the engine is stopped the TCS knob will automatically reset to the (P) position and the transmission park lock will be engaged, except if the TCS knob is in the (N) position when the engine is stopped.

Light Emitting Diodes (LED) on the TCS illuminate to display the selected position. If the selected TCS knob position is not performed by the transmission, the selected position LED flashes.

The steering wheel mounted paddle switches can also be used when the TCS knob is in the (D) position to override the automatic gear selection if required.

PADDLE SWITCHES

Two gear change paddle switches are fitted at the rear of the steering wheel and allow the driver to operate the transmission as a semi-automatic gearbox using the Jaguar sequential shift feature.

Each paddle switch has three connections; ground, illumination Pulse Width Modulation (PWM) supply and ground switch signal. The paddle switches are hardwired to the right steering wheel switchpack. Operation of the paddle switch completes a ground path to the switchpack. The switchpack converts the completed ground signal into a Local Interconnect Network (LIN) bus signal which is passed via the Clockspring and the Steering Wheel Module (SWM) to the Body Control Module/Gateway Module (BCM /GWM) assembly.

Pulling the left downshift (-) paddle switch provides down changes and pulling the right upshift (+) paddle switch provides up changes. The first operation of either paddle switch, after (S) is selected, puts the transmission into permanent semi-automatic sequential shift mode. Rotation of the TCS back to the D position, returns the transmission to conventional automatic operation.

Temporary operation of sequential shift mode can also be operated with the TCS in the D position. Operation of either the upshift or downshift paddle switches activates the semi-automatic mode operation. If the TCS is in D, sequential shift will cancel after a time period or can be cancelled by pressing and holding the + paddle switch for approximately 1.2 seconds.

transmissionmanuals.com

The temporary operation of the paddle switches in the (D) position is disabled in some markets as a default at delivery. This can be overridden in the Instrument Cluster (IC) menu and the driver can configure the paddle switch operation as 'Active in (S) only' or 'Active in (D) and (S)'.

EMERGENCY PARK RELEASE

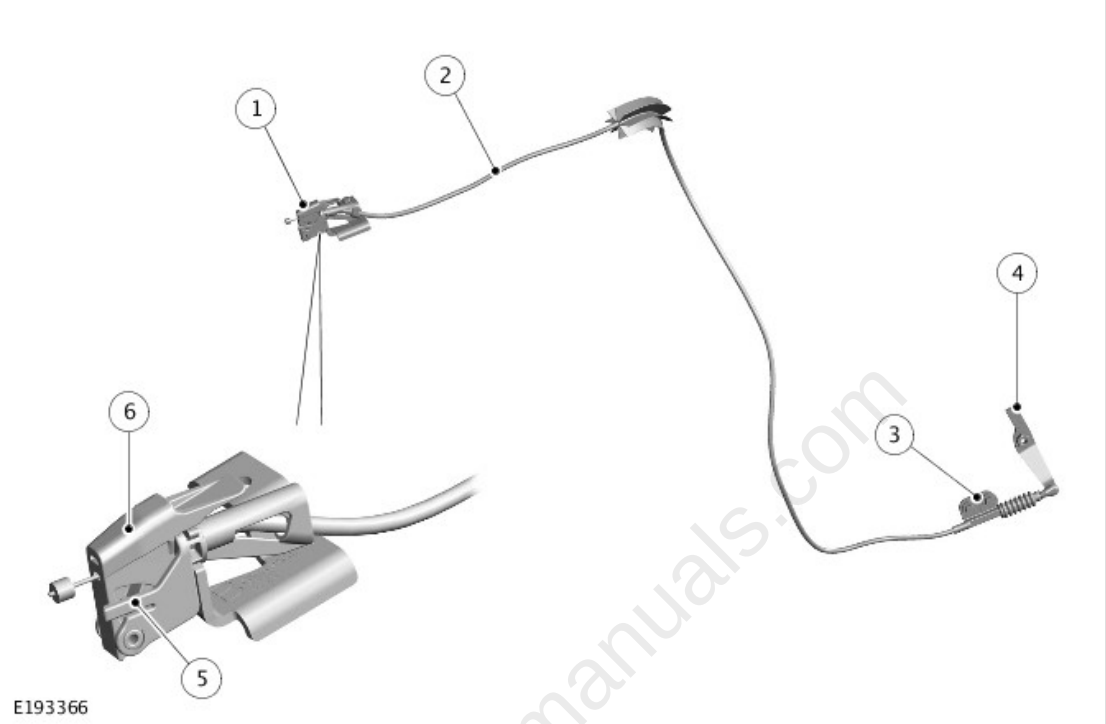

ITEM	DESCRIPTION
1	Emergency Park Release (EPR) lever assembly
2	Cable
3	Cable bracket
4	Lever arm
5	Latch
6	Operating lever

If a vehicle requires recovery, the Emergency Park Release (EPR) mechanism is used to manually disengage the park lock and engage the transmission in Neutral (N).

The EPR mechanism consists of an operating lever that is connected by a cable to a lever arm. The lever arm is attached to the transmission selector shaft and secured with a nut.

transmissionmanuals.com

The EPR operating lever, when moved to the park lock release position (transmission neutral), is locked in position by a latch mechanism which is part of the EPR lever assembly. The latch holds the operating lever and the transmission park lock in the disengaged, transmission neutral, position.

To disengage the park lock:

- Ensure the vehicle is secured via the footbrake (two people required) or wheel chocks
- Open the hood and remove the engine cover (Refer to the applicable service repair procedure)
- Pull the EPR operating lever upwards and ensure it locks in the vertical position. A flashing 'N' symbol will appear on the vehicle IC to signify that the EPR has been activated.

To re-engage the park lock:

- Release the latch using a small flat blade screwdriver or similar instrument and lower the EPR operating lever to the horizontal position. DO NOT force the operating lever to the closed position as this will result in damage to the system. Once the latch is released, the transmission park pawl will engage. The IC display will display a 'P' symbol to show that the transmission has been returned to park.
- Replace the engine cover and close the hood
- Remove wheel chocks if used and ensure vehicle is held on brakes until park lock is engaged.

transmissionmanuals.com

OPERATION

PARK INTERLOCK AND NEUTRAL LOCK

Neutral lock is a requirement for the TCS. The TCS knob is always locked at ignition on (power mode 6) when the engine is not running.

If, when driving with the TCS in (S), (D) or ®) at a speed of more than 5 km/h (3 mph), the driver selects (P) or (N):

- Without the brake pedal pressed, the TCS knob will be immediately locked once the vehicle speed falls to below 5 km/h (3 mph).
- With the brake pedal pressed, the TCS knob will remain unlocked for as long as the brake pedal remains pressed, regardless of vehicle speed.

The transmission will only engage (P) once the vehicle speed is less than 2 km/h (1 mph).

If the driver selects (N) and releases the brake pedal with a vehicle speed of less than 5 km/h (3 mph), the TCS will be locked 2 seconds after (N) is selected. The selector will remain locked until the driver presses the brake pedal again.

If the transmission receives a range change request without the brake pedal pressed, the TCM initiates a soft lock function. The transmission will remain in (P) or (N), depending on the starting position.

If a transmission position letter is flashing in the message center and the vehicle has no drive, the driver must:

- Press the brake pedal.
- Reselect (N) or (P) on the TCS.
- Select the required driving range, ensuring that the brake pedal is pressed.

ROCKING FUNCTION

The rocking function compliments the neutral lock function. For all changes from a non-driving range to a driving range, it is necessary to press the brake pedal (to release either the park interlock or neutral lock).

In situations where the driver will require to change the gear selection from ®) to (D) , or from (D) to ®), without brake pedal input (car park maneuvering, 3 point turns or 'rocking' the vehicle from a slippery surface for example), the rocking function gives a 2 second lock delay when (N) is selected on the TCS and the brake pedal is not pressed.

FAULT SYMPTOMS

The following symptoms may be observed for the following input/output faults:

- Ground - Loss of ground connection or short circuit - TCS will not function
- Powertrain bus - Loss of signal - TCS will not function, TCM will operate in 'limp home' mode
- (P)/(N) signal - Output open circuit or short circuit - Starter motor may not crank or a delay in engine cranking
- (P) signal (TCM output) - Hardwired (P)/(N) signal and Powertrain bus differ - TCS will remain awake with (P) park flashing (will go off when TCM timeout occurs)
- Ignition input - Loss of ignition input or short circuit - TCM will not function
- Permanent battery supply - Loss of power supply or supply out of range (less than 9V or more than 16V) - TCM will not function.

transmissionmanuals.com

CONTROL DIAGRAM

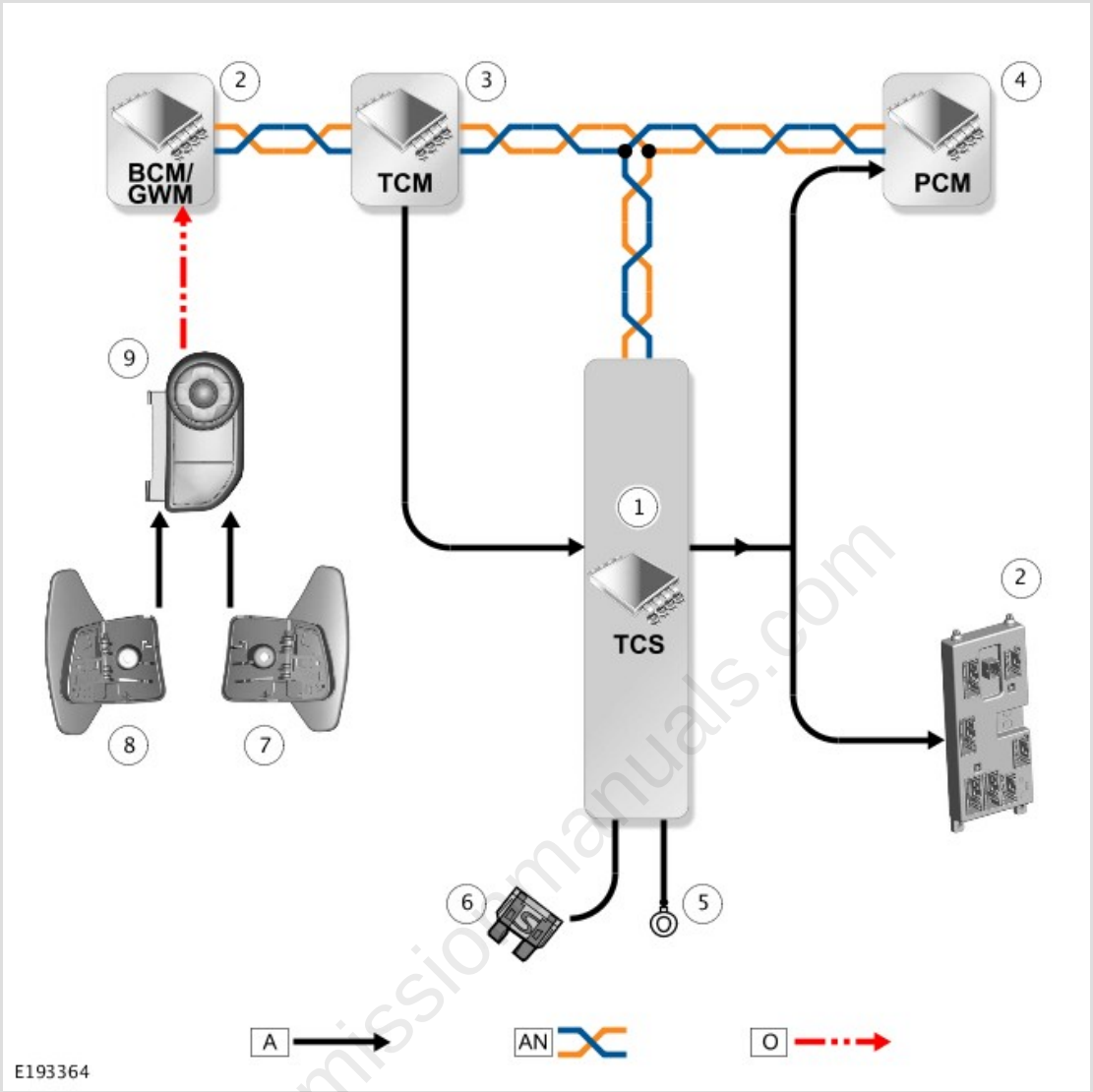

A = HARDWIRED; AN = HIGH SPEED (HS) CONTROLLER AREA NETWORK (CAN) POWERTRAIN SYSTEMS BUS; O = LOCAL INTERCONNECT NETWORK (LIN) BUS.

ITEM	DESCRIPTION
1	Transmission Control Switch (TCS)
2	Body Control Module/Gateway Module (BCM/GWM) assembly
3	Transmission Control Module (TCM)
4	Powertrain Control Module (PCM)
5	Ground
6	Power supply
7	Left steering wheel paddle switch
8	Right steering wheel paddle switch

transmissionmanuals.com

9	Right steering wheel switchpack

transmissionmanuals.com